uprox®3 – Types and Features

uprox®3 – Cylindrical Sensors

	Design	Type code	Ident. no.	Length	Electrical connection	Switching distance
	EH04	BI1U-EH04-AP6X-V1331	4602113	42.7 mm	Connector, M8 x 1	1 mm
		BI1U-EH04-AP6X	4602112	30.2 mm	Cabel PUR, 2 m	1 mm
	EG05	BI1U-EG05-AP6X-V1331	4602117	42.7 mm	Connector, M8 x 1	1 mm
		BI1U-EG05-AP6X	4602116	30.2 mm	Cabel PUR, 2 m	1 mm
	EM08	BI3U-EM08-AP6X-V1131	4602413	39 mm	Connector, M8 x 1	3 mm
		BI3U-EM08-AP6X-H1341	4602412	42.5 mm	Connector, M12 x 1	3 mm
		BI3U-EM08-AP6X	4602411	31.6 mm	Cabel PUR, 2 m	3 mm
	M12	BI6U-M12-AP6X-H1141	1644810	52 mm	Connector, M12 x 1	6 mm
		BI6U-M12-VP6X-H1141	1644805	52 mm	Connector, M12 x 1	6 mm
		BI6U-M12-AP6X	1644801	54 mm	Cabel PVC, 2 m	6 mm
		BI6U-M12-VP6X 7M	1644804	54 mm	Cabel PVC, 7 m	6 mm
	M18	BI10U-M18-AP6X-H1141	1644830	52 mm	Connector, M12 x 1	10 mm
		BI10U-M18-VP6X-H1141	1644844	52 mm	Connector, M12 x 1	10 mm
		BI10U-M18-AP6X	1644840	54 mm	Cabel PVC, 2 m	10 mm
		BI10U-M18-VP6X 7M	1644843	54 mm	Cabel PVC, 7 m	10 mm

uprox®3 – Cylindrical Sensors, PTFE Coated

	Design	Type code	Ident. no.	Length	Electrical connection	Switching distance
	EM08	BI3U-EMT08-AP6X-H1341	4602156	42.5 mm	Connector, M12 x 1	3 mm
	M12	BI6U-MT12-AP6X-H1141	1644811	52 mm	Connector, M12 x 1	6 mm
		BI6U-MT12-VP6X-H1141	1644819	52 mm	Connector, M12 x 1	6 mm
	M18	BI10U-MT18-AP6X-H1141	1644831	52 mm	Connector, M12 x 1	10 mm
		BI10U-MT18-VP6X-H1141	1644855	52 mm	Connector, M12 x 1	10 mm

Benefits in all Areas

Automotive Industry

The PTFE coated threaded barrel devices are the best choice for harsh environments. The devices are protected against weld-spatter or drill cuttings and resist mechanical loads. The absence of a ferrite core makes the sensors insensitive to interference from strong magnetic fields.

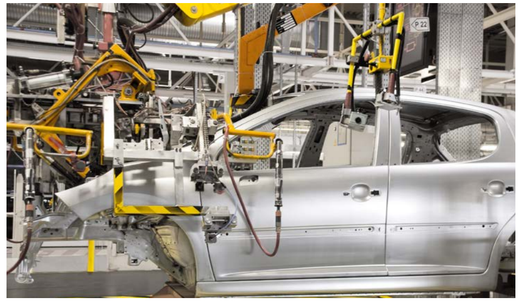

Assembly and Handling Industry

The small devices from the Turck uprox®3 product portfolio meet all requirements in assembly and handling. The all compact versions, even up to the 4 mm smooth barrel types, can be optimally installed in any plant and convince by highest operating distances on steel, stainless steel and aluminium.

28 subsidiaries and over
60 representations worldwide!

D102069 | 2015/11

www.turck.com

Your Global Automation Partner

Factor 1 Sensors
With Highest Switching Distances

uprox®3 – Inductive Factor 1 Sensors with Highest Switching Distances

The 3rd generation of uprox® sensors from Turck offer the highest switching distances of all Factor 1 sensors currently available on the market. If installed flush, the M8 types achieve an unrivalled distance of 3 mm, the M12 types 6 mm and the M18 10 mm.

Turck also sets new standards in terms of design: As a world first, the newly developed electronics of the uprox®3 series enables for the first time Factor 1 sensors in a 4 mm compact smooth barrel design and M5 types with a switching distance of 1 mm, even when installed flush.

Turck was also able to shorten the smallest devices so far, M8 to M18, in the overall length. Like their predecessors, all uprox®3 sensors feature a high EMC stability and can be installed fully flush in all metals.

Highest Switching Distances Worldwide

Although the existing uprox® sensors already offer high switching distances, Turck could increase this in the uprox®3 series by up to 50 percent. The uprox®3 sensors now offer the highest switching distances of all inductive Factor 1 sensors on the market. Compared to conventional sensors with a ferrite core, the uprox®3 offer an up to 300 % higher switching distance.

- Ø 4 design 1 mm
- M5 design, 1 mm
- M8 design, 3 mm
- M12 design, 6 mm
- M18 design, 10 mm

Unrivalled Factor 1 Technology

With the patented uprox®3 sensors, Turck sets new standards in the reliable detection of all metals. They capture copper, aluminium, stainless steel or steel with the same precision and the same high switching distance that was not reachable until now.

Most Compact Designs Ø 4 mm or M5

New Factor 1 technologies allow the most compact housings. Whether Ø 4 mm or M5 devices, M8 sensors in short lengths or compact complementary M12 and M18 versions, the uprox®3 sensors set new standards even in terms of design.

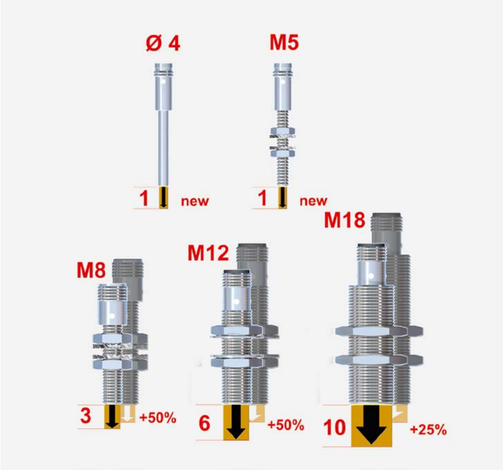

Efficient Sensor Program
With a few variants of the uprox®3 series almost all applications and all target metals are completely covered. The small number of types reduces maintenance costs. The complementary sensors in standard lengths also require no compromise on the definition of the electric versions.

Maximum Design Freedom
Systems can be built space and cost-saving because of the most compact sensors with highest switching distances. A world first are the miniature designs M5 and Ø 4 mm smooth barrels. They are best suited for tight installation conditions or smallest targets. The uprox® series is also perfectly suited for lightweight metal plants

High System Availability
The ability to fully flush installation as well as the greater distance to the moving target reduces the risk of mechanical damage significantly. The uprox®3 sensors ensure long life – even in the welding area – due to high quality PTFE coating and excellent magnetic field strength.

Full-Flush Embedding
All uprox®3 sensors allow fully flush installation, regardless of the carrier material. The guaranteed maximum switching distance on all metals remains fully intact.

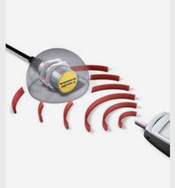

Excellent EMC Properties
The uprox®3 sensors easily meet the stringent requirements of the currently valid product standards for proximity switches. Due to the absence of a ferrite core, the uprox®3 sensors are immune to interference from magnetic AC and DC fields.

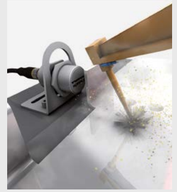

Highest Welding Strength
The absence of a ferrite core, makes the uprox®3 sensors ideal for applications with strong magnetic fields such as in welding areas of the automotive industry. In addition, the high quality PTFE coating reliably prevents adhesion of weld spatter.